Project_____

Item_____

Quantity_____

Date_____

SAP 015 PR

MODEL **SPIDOGLASS** SAP015PR	• **Black ribbed surfaces**	• **Max. temperature 752 °F**
	• **Manual Control**	• **Glass ceramic**

DESCRIPTION

Professional Contact Cooking System with Glass Ceramic plates, suitable for cooking a wide array of different foods, as such: toast, sandwich, meat, fish, vegetables, eggs, etc.
High quality cooking result thanks to heat distribution uniformity and use of shock resistance, non-stick, non-porous and impermeable to smells and tastes Glass Ceramic Cooking Surfaces.
High versatility of use thanks to **SHB™ Plus** technology which allows combined heating (contact + infrared) and high cooking Temperature setting.
Up to 60% saving in Preheating Time thanks to **SHB™ Plus.**
Up to 60% saving in Energy consumption thanks to the **Protek.Safe™** high efficiency insulation system which eliminates unnecessary energy loss.

STANDARD COOKING FEATURES

SETTINGS:

- Manual Control
- Temperature set: 248 °F – 752 °F.

STANDARD TECHNICAL FEATURES

- **Single Black Ribbed Glass Ceramic cooking plate:**
  n°1 15 3/4”x11 13/16” in
- Stainless Steel Case
- Ergonomic Handle
- Self-looking Handle Bracket
- 4 Non-Slip Feets
- Removable Dip Tray
- ON/OFF button and LED light

ACCESSORIES

- **METAL SCRAPER**
  Metallic scraper for Glass Ceramic Surfaces (included)
- **SPIDO CLEAN SPRAY DETERGENT**
  750 ml Spray Detergent for Glass Ceramic and Steel Surfaces (to be purchased separately)

SAP 015 PR

Views
Connection positions
Dimensions and Weights
Installation requirements
Power supply

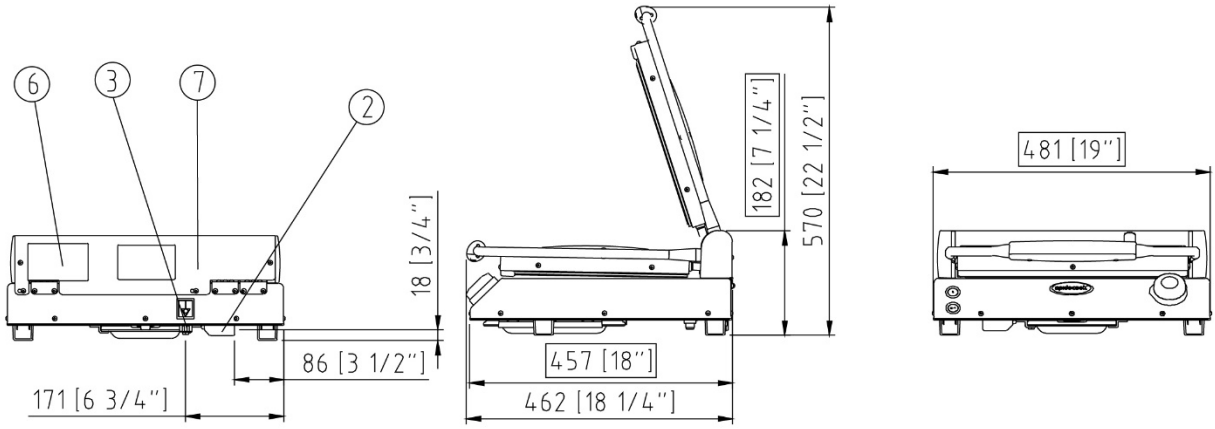

CONNECTION POSITIONS	
2	Terminal board power supply
3	Unipotential terminal
6	Technical data plate
7	Safety thermostat

DIMENSIONS AND WEIGHT	
Width	19”
Depth	18 1/4”
Height	7 1/4”
Net Weight	32,8 lb

INSTALLATION REQUIREMENTS
Installations must conform to all local electrical systems, specifically minimum wire gauge required for field connection, hydraulic and ventilation codes.

POWER SUPPLY	STANDARD
Voltage	240 V
Phase	1PH+N+PE
Frequency	60 Hz
Power	3.1 kW
Maximum Amp Draw	12.9 A
Power cable requirement	SJTO 3 x AWG14
Plug	NEMA 6-20P

SAP 015 PR

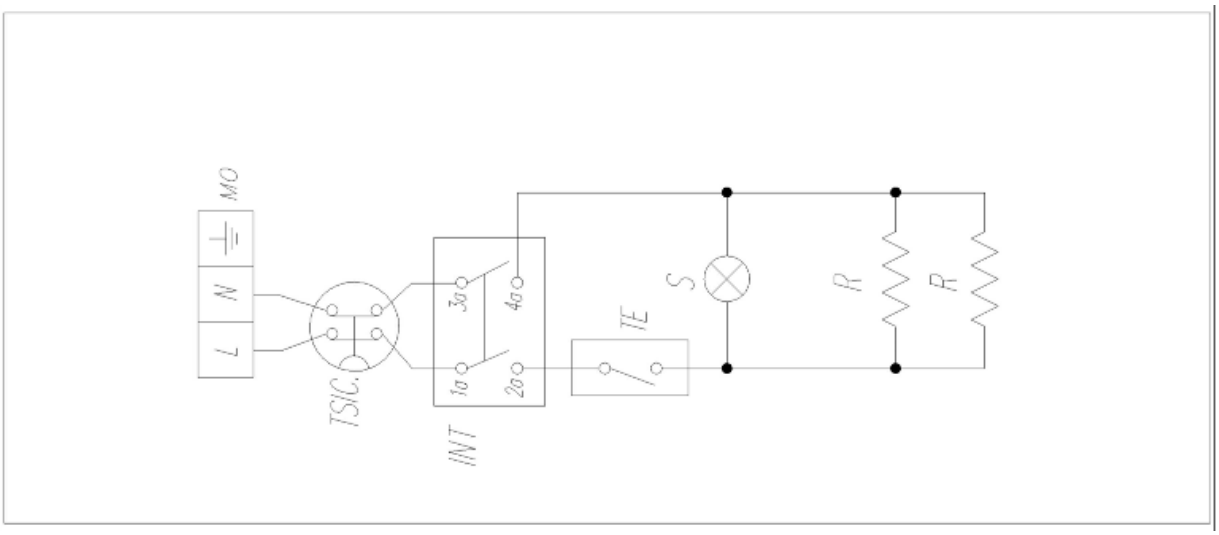

WIRING DIAGRAMS	
INT	Switch
MO	Terminal board
R	Heating element
S	Pilot light
TE	Thermostat
TS	Safety thermostat